Education and Information Technologies
https://doi.org/10.1007/s10639-022-11257-4

Robotic coding and 3D printer with STEM activities; the effect of science teacher candidates on STEM awareness and STEM self-efficacy

Hasan Güleryüz[1] · **Refik Dilber**[2]

Received: 28 March 2022 / Accepted: 20 July 2022
© The Author(s), under exclusive licence to Springer Science+Business Media, LLC, part of Springer Nature 2022

Abstract
STEM education focusing on students' 21st-century skills aims to increase interest in engineering fields such as 3D printing and robotics programming, which have an important place in the future education system. This study aims to examine the impact of STEM activities with robotics programming and 3D printer on teacher candidates ' STEM awareness and STEM self-sufficiency. 37 science teacher candidates participated in the 12-week study. The mixed research method was used in this study. Quantitative data were obtained through the STEM awareness scale and self-sufficiency scale. Qualitative data were obtained through field notes and structured interview forms. According to the findings of the study, there is a positive significant difference in the level of STEM awareness and STEM self-sufficiency of teacher candidates. Within the scope of the study, robotics programming and 3D printer training were given to teacher candidates and activities were conducted. Four robotics programming and one 3D printer activities were conducted. Arduino IDE and Fritzing programs were taught for robotics programming activity. 3D Builder Zaxe PLA program was taught for 3D printer activity. As a result of robotics programming and 3D printer activities, an obstacle detection device was designed for the visually impaired. Thanks to robotics programming and 3D printer activities, teacher candidates' 21st-century skills have developed. Moreover, it is observed that they can more easily adapt to the digital age. In addition, within the scope of STEM, teacher candidates' interest in technology, engineering increased as well as science subjects.

Keywords STEM education · Robotics coding activity · 3D printer activity · STEM awareness · STEM self-sufficiency

✉ Hasan Güleryüz
guleryuz_hasan@yahoo.com

Extended author information available on the last page of the article

Published online: 26 July 2022

1 İntroduction

In the world, it becomes important to train students who think, investigate, and are sensitive to what is happening around them because rapid scientific and technological developments require people to be open to innovation, constructive, productive, and creative. For this reason, creativity and creative thinking should be given sufficient attention in education. As a matter of fact, in the general objectives of National Education and in the special objectives of Science and Technology course, creative thinking skills have often been emphasized. On the other hand, gaining scientific attitudes and behaviors as well as creative thinking skills are important because scientific attitudes create the foundations for scientific thinking (Yilmaz, 2007).

The primary goal of education is not to transfer existing information to individuals, but to learn ways to obtain self-useful information and to make people's lives easier by using this information. Thanks to 3D printers and robotics programming, life is more comfortable today. These technologies provide great convenience in people with disabilities life conditions. People who cannot perceive light at all or who cannot perceive light enough to count the fingers of one hand from a distance of 3 m when both eyes are open in daylight are defined as "visually impaired". From a medical point of view, people who cannot see the largest letter in the standard letter table (Snellen) with both eyes open from a distance of 3 m are regarded as "blind". In addition, people whose eyesight has decreased or partially lost their eyesight due to a disorder or disease that occurs in the eye or brain are also referred to as "visually impaired". The circuit project, which gives audible warning to the visually impaired by detecting Auxiliary Objects, was designed and implemented in order to facilitate the lives of visually impaired people and provide them with access to this device in the cheapest way (Güleryüz, 2020). As a result of STEM activities with 3D printing and robotic coding, an obstacle sensing device was made for the visually impaired. Thanks to this device, it is seen that it makes the life of the visually impaired easier and reduces the difficulties and troubles they face in daily life, even to a small extent. Thanks to this device, they will be able to walk without hitting anything by attaching a mechanism to their arm. We can say that this system is good news for the visually impaired. Thanks to a project we made with Arduino, our visually impaired citizens will not have to hit an object while walking on the road. Thanks to the mechanism we have attached to his arm, when an object appears in front of our visually impaired citizen while walking on the road, the system will give an audible (with buzzer) and vibration (vibrating motor) signal and cause the visually impaired citizen to change direction. This will greatly facilitate the lives of people with disabilities.

STEM education allows students to associate the knowledge they have learned with everyday life. Today, it is emphasized that there should not only be theoretical knowledge but also practical application. In addition, practical application in everyday life allows individuals to develop new ideas and innovative thoughts to produce various solution strategies to the problems they face (Henriksen, 2014;

Tenenbaum et al., 2014). All these definitions have a meaning thanks to STEM education. The concept of STEM is an interdisciplinary approach. STEM education provides the development of competitiveness and STEM literacy based on an interdisciplinary approach. STEM education contributes to global entrepreneurship and enables connections between school, community, and business. In addition, it allows students to establish connections with the fields of Science, Technology, Engineering and mathematics (Thomas, 2014; Güleryüz et al., 2019, 2020; Güleryüz, 2020; Güleryüz & Dilber, 2021a, b). STEM education, thanks to robotics programming and three-dimensional design, may cater for this need in society (Groeger & Schweitzer, 2020; Li et al., 2019; Pande & Bharathi, 2020; Strimel et al., 2018).

By using 3D technology effectively in the education environment, various experiences in a wide range of areas can be gained. 3D technology allows students to produce objects to identify and solve problems using logic (Güleryüz et al., 2019, 2020; Güleryüz, 2020 Güleryüz & Dilber, 2022). When various studies conducted at the international level on the use of technology in laboratory applications are examined, we encounter robotics. Studies show that robotics has a potential effect on students ' learning of different subjects (Physics, Mathematics, Engineering, etc.), their cognitive development, gaining creative thinking, decision making, problem solving, communication and team working skills (Alimisis, 2013; Benitti, 2012). It can provide an opportunity for hands-on learning or kinesthetic learning that enhances the learning experience in STEM subjects. For learning scientific subjects or technical skills, hand interaction is more productive and interactive compared to gestures that create the possibility of kinesthetic learning "learning by doing" (Iqbal et al., 2021). Kinesthetic learning or learning by doing (Begel et al., 2004) is a learning pedagogy that allows learning to interact with learning objects (Mangina, 2017) and practically learn by doing tasks. Science, technology, engineering and technical learning subjects require interaction with learning objects and gaining knowledge by practice instead of learning through traditional teaching; listen and watch. This is why we are considering kinesthetic learning as a possible approach in STEM for robotic coding and 3D printing applications.

Coding is a language used for individuals to communicate with each other through information technologies. Basic coding logic is increasingly becoming an important part of everyday life. Learning programming provides a person with gaining skills such as problem solving, systematic thinking, creative thinking, and seeing the relationships between events. Students should obtain these skills in the beginning (Cameron, 2005; Güleryüz, 2020, 2022; Güleryüz & Dilber, 2021; Güleryüz, et al., 2020). 3D printers have the potential to cause significant changes in areas related to design and production, as well as in all other areas where objects play a role. 3D printers have a strategic importance in the twenty-first century education system. It is seen as an important tool in increasing creativity in technical and mechanical courses. By effectively using 3D printing technology as a material in the educational and training environment, it provides students with different experiences in different fields (Campbell et al., 2011; Güleryüz & Dilber, 2021a, b; Güleryüz, et al., 2019).

The reason why 3D Printers are among the trending topics of recent years is that they provide many benefits to their users. The most important of these is that it produces your designs cheaply and in a short time compared to traditional methods. Another important feature is that it allows you to produce customizable products. In order to get 3D printing, you first need to make a design. These design programs, which have become very easy in recent years, can be easily learned and used by students. Using these design programs to transform the student's idea into a 3D model expands his imagination. With 3D Printers, you can transform abstract objects into concrete ones. This is very exciting for students. Thanks to the design programs, it provides a unique experience for students to see the 3D models they create in the digital world, in the world of atoms – in the real world – and to touch the objects they design themselves. After gaining design skills, students identify the problems they see around them and start to find solutions to them by using design programs. Then, turning the solutions they developed using 3D Printers into concrete enables them to be more creative and solution-oriented. The use of 3D printers in classrooms makes it easier for students to understand objects that are difficult to visualize. Thus, it can be more memorable and instructive by appealing to different sense organs (Güleryüz & Dilber, 2021a, b). The transformation of information technologies day by day introduces us to new professions. One of them is robotics and coding. Children are introduced to coding education from an early age in our country, which has recently been shown among the professions of the future. It is important to expand robotics and coding education in schools, especially in terms of preparing children for the future. Robotic coding contributes to the development of individuals' problem solving, organizational and responsibility skills. Coding also teaches academic skills. With robotic coding, individuals combine coding and programming skills in STEM (science, technology, engineering and mathematics) fields. Robotic coding provides individuals with the skills of problem solving, struggle, cooperation, team sense and perseverance. Robotic coding is applications that require creativity. Children who attract attention with their creativity during training can better observe which areas they are prone to. It is seen that analytical and innovative thinking skills develop with robotic coding. Robotic coding enables creativity and productivity to flourish. In order for these aspects to develop, problem-solving skills must also be developed. Those who deal with this field gain the ability to produce alternative solutions for the problems they experience with robotic coding. With the robotics education, the motor skills of the students also develop. With coding, math skills are also developing. In addition, one of the benefits of the education that provides the comprehension of technical basic information is that it enables students to establish interdisciplinary connections (Güleryüz, 2020).

1.1 İmportance of research

STEM education aims to upskill students through collaboration, systematic thinking, creativity and skills to solve the problems optimally by focusing on integrating science, technology, engineering and mathematics within the framework of twenty-first

century skills. STEM activities with robotics programming and 3D printer are encouraged in the Ministry of Education and are planned to be spread in schools.

Ministry of National Education, General Directorate of Innovation and Educational Technologies shared views about STEM education and robotics programming within the scope of the 2023 education vision;

> "….Today, STEM education, which allows students to integrate their knowledge in Science, Technology, Mathematics and Engineering courses, is integrated into education system of many countries…. "
> "...Content will be developed for the development of digital skills, and in the next three years for teacher training, electronic design, 3D design and similar Informatics and production skills will be integrated into learning processes at the high school, middle school and primary school levels...."
> "…The mobile code application has been prepared for the purpose of digital content and skill-supported transformation in learning processes, the application, which is available in EBA as a block-based coding game suitable for fifth and sixth-grade Information Technology and Software course achievements, was opened to the service of teachers, students and anyone interested in coding through the web, IOS and Android…" (YEĞİTEK, 2019).

1.2 Purpose of research

This study aims to examine the effect of STEM activities on the skills that teacher candidates have in science courses, their STEM awareness, and STEM self-sufficiency.

In accordance with this purpose, answers will be sought to the following sub-problems:

1- What is the effect of STEM activities with robotics programming on teacher candidates ' STEM awareness?
2- What is the effect of STEM activities with robotics programming on the STEM self-sufficiency of teacher candidates?
3- What is the effect of STEM activities with 3D printer on teacher candidates ' STEM awareness?
4- What is the effect of STEM activities with 3D printer on the STEM self-sufficiency of teacher candidates?
5- What are the teacher candidates' views of STEM activities with robotics programming and 3D printer?

1.3 Research problem

What is the effect of STEM activities on STEM awareness and STEM self-sufficiency of teacher candidates?

2 Methods

2.1 Research method

Qualitative and quantitative research methods were used in this study. A mixed research method is a research in which the researcher collects and analyzes data, incorporates findings, and makes inferences using qualitative and quantitative approaches or methods in a single study or research program. The content analysis method was used for the analysis of qualitative data. Content analysis is a systematic, repeatable technique in which some words of a text are summarized with smaller content categories with certain rules-based encodings (Büyüköztürk et al., 2013).

2.2 Sampling

37 science teacher candidates studying at a State University participated in the study voluntarily.

2.3 Application

In this study, STEM education program covering robotics programming activities, which made learning simple and fun for science teacher candidates, were implemented. This program lasted 2 h a week for 12 weeks (total of 48 h). For STEM activities, Arduino IDE and Fritzing programs for circuit diagram were taught. 3D Builder and Zaxe (Desktop) PLA programs were taught for 3D printer

Table 1 STEM activity program with robotic coding and 3D printer

Week	Subject
Week 1	What is STEM Education?
Week 2	Teaching of 3D Builder
Week 3	Teaching of 3D Builder
Week 4	Zaxe (Desktop) PLA
Week 5	3D Printer Activity; The Construction Of The Obstacle Sensor Container For The Visually Impaired
Week 6	Teaching of Arduino IDE Proram
Week 7	Teaching of Arduino IDE Proram
Week 8	Teaching Of Fritzing
Week 9	Robotics Programming Activity; Building Led Lights
Week 10	Robotics Programming Activity; Design Of Ultraviolet Sensor
Week 11	Robotics Programming Activity; Making Park Sensor
Week 12	Robotics Programming Activity; The Production of Obstacle Detection Sensor For The Visually Impaired



Fig. 1 Layered manufacturing (Campbell, Williams, Ivanova, ve Garrett, 2011, s.3)

Printer STL Made In 3D Builder Program	Zaxe PLA Program
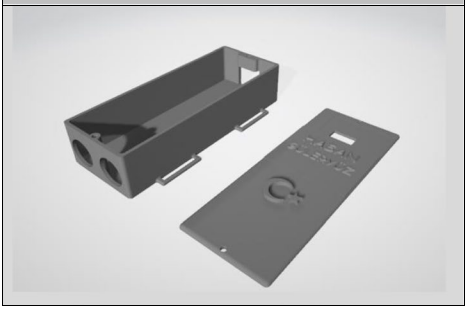	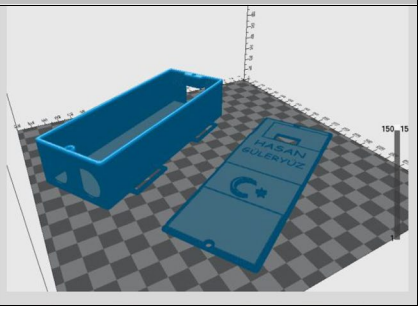

Fig. 2 The construction of the obstacle sensor container for the visually impaired

activities. A brief summary of the application on STEM activities with robotics programming is given below and the work schedule is shown in Table 1.

A Brief Summary of the Application:

- Teacher candidates ' readiness levels for STEM education was measured. Detailed information was given about STEM education.
- For two weeks, teacher candidates were taught the 3D Builder program.
- Zaxe (Desktop) PLA program was taught in the following week (Fig. 1).
- Together with the teacher candidates, the construction of the obstacle sensor container for the visually impaired was successfully completed (Fig. 2).
- For two weeks, teacher candidates were taught the Arduino IDE program, one of robotics programming.
- For one week, teacher candidates were taught the Fritzing program for drawing the circuit diagram in robotics programming.
- Four STEM activities related to robotics programming were conducted (Fig. 3).
- Thanks to STEM activities, the production of obstacle detection sensor for the visually impaired was successfully done (Fig. 4).

3D printer activity was carried out according to layered manufacturing.

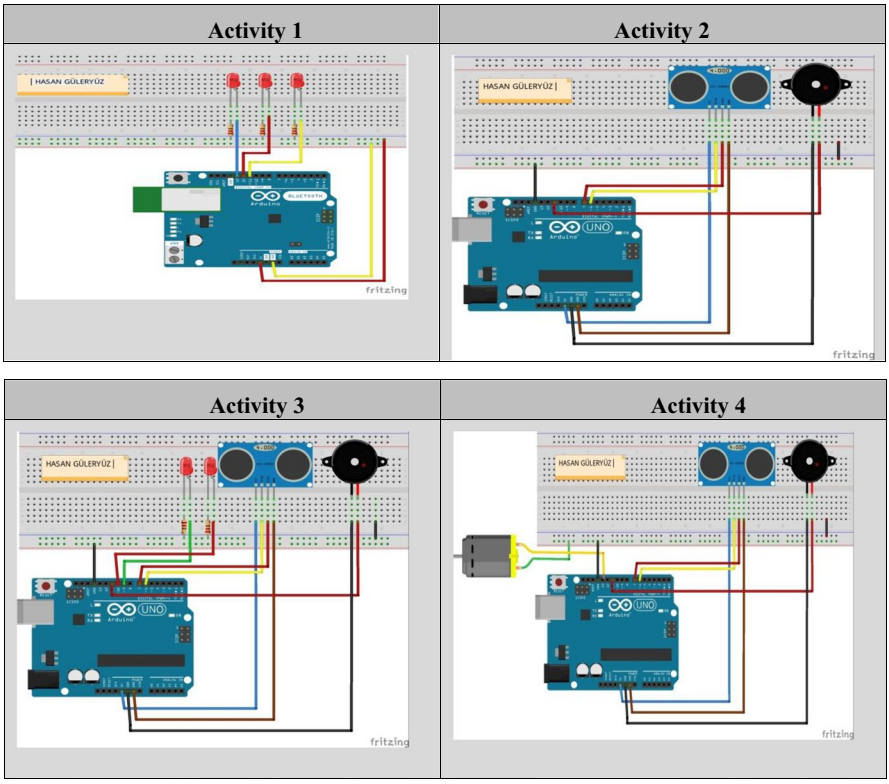

Fig. 3 Robotics programming STEM activities

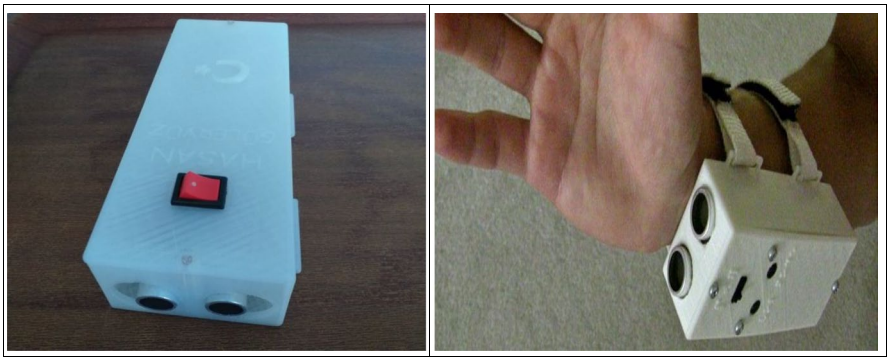

Fig. 4 Obstacle detection sensor for the visually impaired

2.4 A list of materials

- *3D plastic Printing*
- *Arduino Uno*
- *Ultrasonicsensor*
- *Buzzer*
- *Vibration motor*
- *Male to male jumper cable*
- *Male to female jumper cable*
- *Board*
- *9 V battery*
- *Key*
- *Codes are included in Appendix-1*

2.5 Data collection tools

2.5.1 Quantitative data

STEM Awareness Scale; The STEM awareness scale was developed by Buyruk and Korkmaz (2014). The scale measures the level of teacher candidates' STEM awareness. Validity and reliability of the scale were conducted. The Cronbach Alpha coefficient was used to determine the reliability of the scale. The reliability of the scale is regarded as being high in total (Cronbach's Alpha = 0.927). The scale consists of 17 items and 2 factors.

Self-Efficacy Scale; Teacher self-efficacy scale developed by Yaman, Özdemir and Vural in 2018 is for determining the self-efficacy of teacher candidates towards STEM approach. This scale consists of 18 items. A fivepoint Likert, 1 indicates the strongest degree of agreement with a particular statement and 5 the strongest degree of disagreement, was used. After that, validity and reliability analysis was performed. Explanatory factor analysis (AFA) was performed for the scale's structural validity. The internal consistency of the test was calculated as Cronbach's Alpha. The reliability of the scale is regarded as being high in total (Cronbach's Alpha = 0.97) The scale is one-dimensional and explains 68.2% of the total variance. Confirmatory factor analysis (DFA) was performed to confirm the factor structure of the scale.

2.5.2 Qualitative data

Field notes and structured interview forms were used. The researcher helped participants whenever they needed during activities. During the entire study, the researcher took field notes regarding dialogues and observations. Field notes recorded by the researcher were given to teacher candidates at the end of the course, confirming the accuracy of the notes. Field notes were used in the analysis of qualitative data and the interpretation of events.

Table 2 STEM awareness levels

N	Valid data	37
	dissing value	0
Skewness		0.46
Std. Er.Skewness		0.38
Kurtosis		0.20
Std. Er. Kurtosis		0.75

Table 3 Paired sample t-test for STEM awareness levels

		$\bar{x}$	n	ss	sh_x
Second Variable	PRE-TEST	63.18	37	3.08	0.50
	POST-TEST	77.54	37	2.89	0.47

Structured Interview Questions:

1- How did your change of awareness against STEM education develop after activities?
2- How did your STEM self-sufficiency improve after activities?
3- What are the advantages of STEM activities?
4- What are the problems you experienced during STEM activities?

2.5.3 Analysis of the data

Paired sample t-test was performed for the data being homogeneous. On the other hand, Wilcoxon test was performed for the data not being homogeneous. In addition, the cronbach alpha value was considered in determining the reliability of quantitative data collection tools.

After the activities, teacher candidates answered the semi-structured interview questions. It has been declared that answers of semi-structured interview questions will not evaluated for academic purposes, but will only be used in the study. Teacher candidates were asked not to write their names. In this way, an environment has been provided for teacher candidates to express their ideas in a more comfortable and neutral way.

3 Findings

3.1 Quantitative findings

The scale was applied at the beginning and end of the activities to examine whether STEM activities have an impact on teacher candidates ' STEM awareness levels. The paired sample t-test was conducted.

According to Table 2, the kurtosis and skewness are between + 2 and -2. In addition, the results of the Kolmogorov Smirnov test and the results of the histogram

Table 4 Paired sample t-test

		$\bar{x}$	ss	sh_x	Lower	Upper	t	df	p
Second Variable	PRE-TEST-POST-TEST	-14.35	3.91	0.64	-15.65	-13.04	-22.28	36	0.000

Table 5 Teacher candidates' self-efficacy levels

N	Valid data	37
	missing value	0
Skewness		-0.155
Std. Er.Skewness		0.388
Kurtosis		-0.988
Std. Er.Kurtosis		0.759

Table 6 Paired sample t-test for self-efficacy levels

		$\bar{x}$	n	ss	sh_x
Third Variable	PRE-TEST	66.29	37	5.03	0.82
	POST-TEST	74.48	37	5.25	0.86

Table 7 Paired sample t-test

		$\bar{x}$	ss	sh_x	Lower	Upper	t	df	p
Second Variable	PRE-TEST-POST-TEST	-8.19	5.23	0.86	-9.93	-6.44	-9.52	36	0.000

Graphine support this data. These values indicate a normal distribution. Parametric tests were used. The paired sample t-test.

Examining Table 3, an increase between pre-test and post-test was observed ($\bar{X}_{\text{pre-test}} = 63$ and $\bar{X}_{\text{post-test}} = 77$). But in order to get more scientific and accurate results, we need to study the results of the T test.

According to Table 4, STEM awareness levels of teacher candidates significantly increased; $t(36) = -22.28$; $p = 0.00$). The calculated Cohen D effect size ($d = 3.65$) showed that the difference was significant. Based on this finding, it can be concluded that STEM activities have positive effects on the level of STEM awareness of teacher candidates.

The scale was applied at the beginning and end of the activities to examine whether STEM activities have impacts on the level of self-efficacy of teacher candidates. The paired sample t-test was conducted.

According to Table 5, the kurtosis and skewness are between + 2 and -2. In addition, the results of the Kolmogorov Smirnov test and the results of the histogram Graphine support this data. These values indicate a normal distribution. Parametric tests were used.

Examining Table 6, an increase between pre-test and post-test was observed($\bar{X}_{\text{pre-test}} = 66$ and $\bar{X}_{\text{post-test}} = 74$). But in order to get more scientific and accurate results, we need to study the results of the T test.

According to Table 7, self-eficacy levels of teacher candidates significantly increased; $t(36) = -9.52$; $p = 0.00$). The calculated Cohen D effect size ($d = 1.56$) showed that the difference was significant. Based on this finding, it can be concluded that STEM education has a positive effect on the self-sufficiency level of teacher candidates.

After the STEM activities, it is seen that the teacher candidates are academically sufficient in the scientific process skills required in the design of STEM activities, can develop the necessary models and materials, and have reached levels that can now take part in the relevant projects.

3.2 Qualitative findings

Structured interviews were conducted with teacher candidates to further examine the topic related to STEM activities. Some of teacher candidates' views on STEM activities are given in tables below.

The answers of teacher candidates to the question of "*How did your change of awareness against STEM education develop after activities?"* are given in Table 8.

Examining Table 8, gaining high-level thinking skills stood at % 62.1, representing the highest rate, improving creativity stood at % 54, increasing curiosity about science class stood at %16.2, representing the lowest rate.

The number of STEM activities should be increased. Environments in which each student can make simple designs that they can use in their daily life should be prepared. Schools should be organized in such a way that STEM activities can be done, and course subjects should provide opportunities for activities. In addition, teacher candidates stated that their interest in the science course increased thanks to STEM activities and they gained high-level thinking skills. The statements of the teacher candidates support this.

At what level did your awareness of STEM education develop after STEM activities?

Table 8 How did your change of awareness against STEM education develop after activities?

	f	%
Gaining high-level thinking skills	23	62.1
Improving creativity	20	54
Developing problem-solving skills	17	45.9
Increasing self-confidence	12	32.4
Gaining a critical perspective	9	24.3
Increasing interest in science class	7	18.9
Increasing curiosity about science class	6	16.2

Table 9 What level did your level of STEM self-sufficiency improve after STEM activities?

	f	%
Having science process skills required for STEM activity	14	37.8
Designing model and material	9	24.3
Having self-confidence in STEM activities	8	21.6
Adapting STEM activities to daily life	4	10.8
Ability to work in STEM projects	3	8.1

Teacher Candidate (TC) 7: "…Thanks to STEM activities, I realized that my critical thinking skills improved…".
TC8: "…My STEM awareness improved. I look forward to STEM activities…".
TC9: "…Thanks to STEM activities, I realize that I gained high-order thinking skills…".

The answers of teacher candidates to the question of "At what level did your level of STEM self-sufficiency improve after STEM activities ?" are given in Table 9.

Examining Table 9, having science process skills required for STEM activitystood at % 37.8, representing the highest rate, designing model and material stood at % 24.3, Ability to work in STEM projects stood at %8.1, representing the lowest rate.

Students who have experience in STEM fields extract the information more quickly. They can adapt and transfer knowledge to science, mathematics, technology and engineering. These skills develop the ability of the student to have self-confidence and analytical thinking. Before a STEM-related study is carried out, it would be better to give teacher candidates preliminary information about STEM. Teacher candidates stated that they have self-sufficiency that can easily design and implement any STEM activity. The statements of the teacher candidates support this.

The answers of teacher candidates to the question of "At what level did your level of STEM self-sufficiency improve after STEM activities?" are given below: Delete.

TC 14: "…I can design any STEM-related activity. I have self-sufficiency to take part in a project…".

Table 10 What are the advantages Of STEM activities with robotics programming and 3D printer?

	f	%
Ensuring effective teaching	35	94.5
Providing convenience of learning	29	78.3
Ensuring participation in the course	24	64.8
Ensuring self-confidence	19	51.3
Development of psychomotor skills	13	35.1
Productivity improvement	11	29.7
Development of creativity	11	29.7

TC 15: "…I am very confident in developing any model or material with STEM activities…".
TC 2, TC 19, TC 23: " … I believe that I am competent enough to easily design and implement any kind of STEM activity as a prospective teacher …".

Answers to the question of "What are the advantages of STEM activities with robotics programming and 3D printer?" are given in Table 10.

Examining Table 10, ensuring effective teaching stood at % 94.5, representing the highest rate, providing convenience of learning stood at % 78.3, productivity improvement and development of creativity stood at %29.7, representing the lowest rates.

Simple activities allowed students to obtain concrete knowledge. Activities helped students to be permanent learner. They created a meaningful whole by bringing together different subjects they learned in different disciplines. In this way, they were able to gain practical thinking skills and learn to find solutions because they encountered a problem. Teacher candidates stated that they could produce something thanks to STEM activities. The statements of the teacher candidates support this.

Some answers to the question of " What are the advantages of STEM activities with robotics programming and 3D printer" are given below:

TC 9: "... I felt like an engineer..."
TC 10:"... Thanks to STEM applications, I can now imagine something and turn this dream into a product with 3d printer applications…"

Answers to the question of "Which problems have you experienced during STEM activities with robotics programming and 3D printer?" are given in Table 11.

Examining Table 11, lack of materials stood at % 94.5, representing the highest rate, lack of equipped laboratory suitable for STEM activities stood at % 86.4, teamwork problems stood at %10.8, representing the lowest rate.

Problems related to STEM activities were expressed by teacher candidates. These problems include lack of material and time. Considering these problems related to STEM activities is very important in terms of teachers being able to apply these activities more effectively. The application area of STEM-based course activities should be expanded. In particular, technical support should be provided to teachers by establishing a unit related to the supply of materials. Science teachers should

Table 11 What are the problems you experienced during STEM activities?

	f	%
Lack of material	35	94.5
Lack of equipped laboratory suitable for STEM activities	32	86.4
Inadequate weekly course house	21	56.7
Lack of students ' readiness levels	14	37.8
Feeling of inadequacy	10	27
Teamwork problems	4	10.8

be encouraged to apply STEM in their classrooms. It is known that there are not enough laboratories/workshops in both universities and high schools. STEM activities are not allocated enough time in the curriculum. The statements of the teacher candidates support this.

Some answers to the question of "What are the problems you experienced during STEM activities?" are given below: Delete.

TC 16: "… Due to the lack of necessary tools and equipment, I cannot improve myself…".
TC 17: "…I wish one day of the week was reserved for STEM activities…".

4 Discussion

According to the results of the study, there is significant difference between pre-and post-application (see Table 4). STEM activities with robotics programming and 3D printer enabled teacher candidates to integrate their knowledge in science, technology, math and engineering, and to gain collaboration, systematic thinking, communication, research, and creativity skills.

These results support the findings of Buyruk and Korkmaz (2014). They developed a valid and reliable scale that could be used to measure teacher candidates ' awareness of STEM education. Duygu (2018) conducted a study about determining the impact of STEM education on students ' scientific process skills and STEM awareness levels. Güleryüz, et al. (2019) conducted a similar study on teacher candidates ' views on the use of 3D printers in STEM activities. Güleryüz, et al. (2020) conducted a similar study examining teacher candidates ' views on programming education. Güleryüz (2020) conducted a study examining the impact of STEM activities with robotics programming and 3D printer on teacher candidates' 21st-century skills, STEM awareness, and self-sufficiency. It has been concluded that STEM education has a positive effect on students ' STEM awareness levels. Considering the role STEM, which has just entered our education system, will play in the education of the next generation, the importance of teacher candidates being aware of this issue is understood.

According to the views of teacher candidates, there are some problems related to STEM activities. These problems can be stated as the obligation to master the subject, lack of materials and time, inability to take courses in the curriculum. Siew et al. (2015)'s study supports the findings of this study. In their study, teacher candidates expressed lack of material and time as problems they faced. This proposal should be taken into account for effective science programs in Turkey. After the activities, there is a clear improvement in the level of high-level thinking skills, critical skills and STEM awareness in teacher candidates. Some of opinions of teacher candidates are as follows:

TC 5. "… Thanks to STEM activities, I learned the meaning of STEM and my STEM awareness increased…."
TC 13. "… Thanks to STEM activities, I felt like an engineer …".
TC 21. "… Thanks to STEM activities, science classes are more fun…".

TC 30.“ …Thanks to STEM activities, I increased my permanence of learning…”.

According to Table 7, self-efficacy levels of teacher candidates significantly increased. Self-sufficiency refers to an individual's perception of what he or she can do with the ability he or she has. In this context, it can be said that teacher candidates have more knowledge and self-confidence about what they can do with the skills they have gained thanks to STEM education. Thanks to the knowledge and experience students have gained through education, they produce new ideas. One of the teacher candidates participating in the study said that he could build models by becoming aware of the necessary knowledge and skills. Another teacher candidate stated that he could participate in new projects, which is an indicator of self-confidence. This shows that through STEM education, teachers have become aware that their knowledge, skills and abilities developed. They have developed the ability to transfer their existing knowledge through STEM activities. This, in turn, has led them to develop their self-confidence and realize what they can do in the future with the experience they have gained, that is, to develop their perception of self-sufficiency in a positive way.

It seems that studies on individual levels of self-sufficiency are usually practice-based studies conducted with primary, secondary, and high school students. Examining the literature reveals that there is only one study on STEM self-sufficiency in Turkey (Yaman et al., 2018). Güleryüz (2020) conducted a study examining the impact of STEM activities with robotics programming and 3D printer on teacher candidates' 21st-century skills, STEM awareness, and self-sufficiency. For this reason, this study is also important in terms of contributing to the literature. Some opinions of teacher candidates are as follows:

TC 3. “… As part of STEM training, I realized that I had the self-sufficiency to design a robotics programming activity…”.
TC 19. "…I can participate in any STEM project…”.
TC 22. "…I can now make a project related to robotics programming or 3D printer activities…".
TC 25. “… As part of STEM training, I realized that I had the self-sufficiency to design a 3D printer-related activity…”.

Similarly, many national and international studies have shown that STEM education contributes positively to students ' levels of STEM awareness and STEM self-sufficiency (Acar et al., 2018; Alıcı, 2018; Baran et al., 2015; Bircan, 2019; Çavaş et al., 2013; Çevik, 2018; Dedeturk, 2018; Fortus et al., 2004; Gazibeyoglu, 2018; Gülhan & Şahin, 2018; Güleryüz et al., 2019, 2020; Gülgün et al., 2017; Güzey et al., 2016; Kager, 2015; Marulcu & Sungur, 2012; Öner & Capraro, 2016; Moore & Richards, 2012; Wang, 2012; Moore et al., 2013; Olivarez, 2012; Pekbay, 2017; Siew et al., 2015).

STEM activities with 3D printing and Robotic coding help pre-service teachers to develop and apply a conceptual understanding of science, technology, engineering and mathematics by designing solutions to new problems and making new inventions, by creating an environment for developing fun applications. It is

important for students of all ages to engage in this type of critical thinking to prepare for their future careers. Practices are carried out in environments that enable students to code robots, design new productions with 3D printers, play with games and simulations, collect and analyze scientific data. STEM activities with robotic coding and 3d printer should be prepared well by experts. These effects should be taught and practiced in schools, universities and stem centers.

Considering the role STEM, which has just entered our education system, will play in the education of the next generation, the importance of teacher candidates being aware of this issue is understood.

5 Conclusions

Thanks to STEM activities with robotics programming and 3D printer, there is a significant difference in teacher candidates ' STEM awareness levels. Positive views of teacher candidates on STEM activities, their openness to innovation, and eagerness to learn show that the study positively contributes to the development of teacher candidates. As a result of this research, it is seen that integration of science courses with STEM education is important in terms of improving the quality of science education. Getting the opinions of science teachers on STEM activities will shed a light on science education. It has been concluded that STEM activities will have positive effects on students. These positive effects can be listed as increasing interest, improving productivity, increasing motivation, creativity, developing scientific process skills and psychomotor skills, ensuring that they have a pleasant and productive time in science classes, gaining a positive perspective, gaining responsibility and ensuring that they succeed in other areas. Integration of STEM education into our education system will only be possible if teacher candidates fully understand the logic of STEM education. Therefore, it is important that teacher candidates are provided with STEM awareness-raising trainings. According to the results of the study, integrating STEM into the curriculum significantly contributes to raising awareness of teacher candidates for STEM.

STEM activities with robotics programming and 3D printer have positive and significant impact on STEM self-efficacy levels of teacher candidates. Teacher candidates participating in the study also stated that the number of training on STEM activities should be expanded. Teacher candidates believe that they have the necessary skills and academic knowledge about STEM, and that they can design STEM-related activities and participate in any academic study. The field of application of robotics, three-dimensional design and STEM-based course activities should be expanded. They should not be limited to science teachers, but also given to other teachers. Through training, science teachers should be encouraged to apply STEM in their classrooms. Teacher candidates having positive thoughts on STEM activities are essential to the success of science education. It is also very important for science teachers to have a positive attitude toward activities that will ensure effective learning in students. Science teachers who are open to innovation are wanted to educate their students as students who can also research, question, have scientific curiosity, and are open to innovation.

6 Suggestions

1- STEM education should be given to all students. Gifted, talented, and curious students can be determined from the students and they can be given more advanced STEM education.
2- STEM education studies and projects can be conducted in STEM education centers, involving academicians and educators who are experts in the field of STEM.
3- In order to integrate STEM education into science curricula, the need for robotic coding and 3d printing applications should be determined by experts working in STEM Centers.
4- Thanks to the use of robotic coding and 3D printers in STEM applications, students can be given the opportunity to make sense of their learning and to concretize soft information in order to ensure permanence in learning.
5- STEM activities should be well prepared, these effects should be taught and practiced in schools, universities and stem centers.

Appendix 1

Codes

```
<-guleryuz_hasan->
  inttrigPin 6
  intechoPin7
  intbuzzer 11
  intmotor 13
  voidsetup() {
  pinMode(trigPin, OUTPUT);
  pinMode(echoPin, INPUT);
  pinMode(buzzer, OUTPUT);
  pinMode(motor, OUTPUT);}
  voidloop(){
  long sure, mesafe;
  digitalWrite(trigPin,LOW);
  delayMicroseconds(5);
  digitalWrite(trigPin,HIGH);
  delayMicroseconds(10);
  digitalWrite(trigPin,LOW);
  sure=pulseIn(echoPin, HIGH);
  mesafe=(sure/2)/29.1;
  if(distance<100){
  digitalWrite(motor, HIGH);
  digitalWrite(buzzer, HIGH);}
  else{
```

```
digitalWrite(motor, LOW);
digitalWrite(buzzer, LOW);}
delay(500);}
```

Authors' contributions Not applicable

Data availability Not applicable

Declarations

Ethical approval Not applicable

Consent for publication Not applicable

Competing interests Not applicable

References

Acar, D., Tertemiz, N., & Taşdemir, A. (2018). The effects of STEM training on the academic achievement of 4th graders in science ve mathematics ve their views on STEM training. *International Electronic Journal of Elementary Education, 10*(4), 505–513.

Alıcı, M. (2018). *The effect of STEM education on attitude, career perception and professional interest in a problem-based learning environment and student opinions.* (Master's Thesis). Obtained from the National Thesis Center of the Council of Higher Education. (Thesis No. 507585).

Alimisis, D. (2013). Educational robotics: Open questions and new challenges. *Themes in Science and Technology Education, 6*(1), 63–71.

Baran, E., Canbazoğlu Bilici, S., & Mesutoğlu, C. (2015). Science, technology, engineering and math (STEM) spot development activity. *Journal of Research-Based Activity (ATED), 5*(2), 60–69.

Begel, A., Garcia, D. D., & Wolfman, S. A. (2004). Kinesthetic learning in theclassroom. *ACM SIGCSE Bulletin, 36*(1), 183–184.

Benitti, F. B. V. (2012). Exploring the educational potential of robotics in schools A systematic review. *Computers & Education, 58*(3), 978–988.

Bircan, M. A. (2019). *The effect of STEM education activities on primary school fourth grade students' attitudes towards STEM, 21st century learning skills and mathematics achievement* (Unpublished Doctoral Thesis). Ondokuz Mayıs University.

Buyruk, B., & Korkmaz, Ö. (2014). STEM awareness scale (STEM): Validity and reliability study. *Journal of Turkish Science Education, 11*(1), 3–23.

Büyüköztürk, Ş, Kılıç Çakmak, E., Akgün, Ö. A., Karadeniz, Ş, & Demirel, F. (2013). *Scientific research methods*. Pegem Academy Publishing.

Cameron, R. G. (2005). *Mindstorms Robolab: Developing science concepts during a problem based learning club*, The Master thesis, Department of Curriculum, Teaching and Learning, The University of Toronto, Canada.

Campbell, T., Williams, C., Ivanova, O., &Garrett,B. (2011). *Could 3D printing change the world. Technologies, Potential, andImplications of Additive Manufacturing*, Atlantic Council, Washington, DC.

Çavaş, B., Bulut, C., Holbrook, J., & Rannikmae, M. (2013). An engineering-oriented approach to science education: The Engineer project and its applications. *Journal of Science Education, 1*(1), 12–22.

Çevik, M. (2018). Impacts of the project based (pbl) science, technology, engineering ve mathematics (stem) education on academic achievement ve career interests of vocational high school students. *Pegem Eğitim ve Öğretim Dergisi, 8*(2), 281–306. https://doi.org/10.14527/c8s2

Dedeturk, A. (2018). *Developing and implementing teaching activities with STEM approach in 6th grade sound and investigating its effect on success* (Unpublished Master's Thesis). Erciyes University.

Duygu, E. (2018). *The effect of STEM education on scientific process skills and STEM awareness in a simulation-based inquiry learning environment* (Master's thesis, Kırıkkale University).

Fortus, D., Dershimer, R. C., Krajcik, J. S., Marx, R. W., & Mamlok-Naaman, R. (2004). Design-based science and student learning. *Journal of Research in Science Teaching, 41*(10), 1081–1110.

Gazibeyoglu, T. (2018). *Investigation of the effects of STEM applications on the success of 7th grade students in the force and energy unit and their attitudes towards science lesson* (Master's Thesis). Obtained from the National Thesis Center of the Council of Higher Education. (Thesis No. 496276).

Groeger, L., & Schweitzer, J. (2020). Developing a design thinking mindset: Encouraging designerly ways in postgraduate business education. *Design Science and Innovation*, 41–72. https://doi.org/10.1007/978-981-15-5780-4_3

Güleryüz, (2020). *The effect of 3D printer and robotic coding applications on 21st century learner skills of prospective teachers, STEM awareness and STEM teacher self-efficacy.* Doctorate Thesis, Atatürk University, Institute of Educational Sciences. Erzurum.

Güleryüz, H., & Dilber, R. (2021a). STEM activities made with robotic coding; the effect on awareness of teacher candidates regarding its use in science lessons. *İnternational Journal of Engineering Teknologies and Management, 8*(11), 79–96.

Güleryüz, H., & Dilber, R. (2021b). STEM activities made with 3D printer; the effect on awareness of teacher candidates regarding its use in science lessons. *İnternational Journal of Research-Grantaal-ayah, 9*(10), 336–378.

Güleryüz, H., & Dilber, R. (2022). The impact of robotics coding and 3d printıng STEM actıvıty on 21st century learner skills of teacher candidates. *International Journal of Engineering, 4*, 1–18.

Güleryüz, H., Dilber, R., & Erdoğan, İ. (2019). Opinions of preservice teachers on using 3D printer in STEM Applications. Ağrı İbrahim Çeçen University. *Journal of Social Sciences, 5*(2), 1–8.

Güleryüz, H., Dilber, R., & Erdoğan, İ. (2020). Opinions of teacher candidates on coding education in STEM applications Ağrı İbrahim Çeçen University. *Journal of Social Sciences, 6*(1), 71–83.

Güleryüz,. (2022). The effect of robotic coding (Mblock - Arduino) activities on students' self-efficacy and attitudes. *Acta Scientific Computer Sciences, 4.8*(2022), 02–09.

Gülgün, C., Yılmaz, A., & Çağlar, A. (2017). Teachers' opinions about the qualifications that should be found in the STEM activities applied in the science course. *Journal of Current Researches on Social Sciences, 7*(1), 459–478.

Gülhan, F., & Şahin, F. (2018). Comparative analysis of middle school 5th and 7th grade students' perceptions of engineers and scientists. *Necatibey Education Faculty Electronic Journal of Science and Mathematics Education, 12*(1), 309–338. https://doi.org/10.17522/balikesirnef.437785

Güzey, S. S., Moore, T. J., Harwell, M., & Moreno, M. (2016). STEM integration in middle school life science: Student learning ve attitudes. *Journal of Science Education and Technology, 25*(3), 550–560.

Henriksen, D. (2014). Full STEAM ahead: Creativity in excellent STEM teaching practices. *STEAM, 1*(2), 1–9. https://doi.org/10.5642/steam.20140102.15

Iqbal, M. Z., Mangina, E., & Campbell, A. G. (2021). Exploring the real-time touchless hand interaction and intelligent agents in augmented reality learning applications. In *2021 7th International Conference of the Immersive Learning Research Network (iLRN)* (pp. 1–8). IEEE.

Kager, E. (2015). *Effects of participation in a STEM camp on STEM attitudes ve anticipated career choices of middle school girls: A mixed methods study* (Unpublished Doctoral Dissertation). Ohio University.

Li, Y., Schoenfeld, A. H., diSessa, A. A., Graesser, A. C., Benson, L. C., English, L. D., & Duschl, R. A. (2019). Design and design thinking in STEM education. *Journal for STEM Education Research, 2*(2), 93–104. https://doi.org/10.1007/s41979-019-00020-z

Mangina, E. (2017). "3D learning objects for augmented/virtual realityeducational ecosystems," in 2017 23rd International Conference onVirtual System Multimedia (VSMM), 2017, pp. 1–6.

Marulcu, İ, & Sungur, K. (2012). Examination of pre-service science teachers' perceptions of engineers and engineering, and their perspectives on engineering-design as a method. *Afyon Kocatepe University Journal of Science, 12*(2012), 13–23.

Moore, T. J., Stohlmann, M.S., Wang, H.-H., Tank, K.M., & Roehrig, G.H. (2013). Implementation and integration of engineering in K-12 STEM education. In J. Strobel, S. Purzer, & M. Cardella (Edt.), *Engineering in precollege settings: Research into practice*. Sense Publishers.

Moore, T., & Richards, L. G. (2012). P-12 engineering education research and practice. *Introduction to a Special Issue of Advances in Engineering Education, 3*(2), 1–9.

Olivarez, N. (2012).*The impact of a STEM program on academic achievement of eight grade students in a south texas middle school* (Doctoral Dissertation). Texas A ve M University.
Öner, A., & Capraro, R. (2016). Does being a STEM school mean good student success? *Education and Science, 41*(185), 1–17. https://doi.org/10.15390/EB.2016.3397
Pande, M., & Bharathi, S. V. (2020). Theoretical foundations of design thinking – A constructivism learning approach to design thinking. *Thinking Skills and Creativity, 36*, 100637. https://doi.org/10.1016/j.tsc.2020.100637
Pekbay, C. (2017). *The Effects of Science, Technology, Engineering and Mathematics Activities on Secondary School Students* (Published Master's Thesis). Hacettepe University Institute of Educational Sciences.
Siew, N. M., Amir, N., & Chong, C. L. (2015). The perceptions of pre-service and in-service teachers regarding a project-based STEM approach to teaching science. *SpringerPlus, 4*(1), 8–22.
Strimel, G. J., Bartholomew, S. R., Kim, E., & Zhang, L. (2018). An investigation of engineering design cognition and achievement in primary school. *Journal for STEM Education Research, 1*(1–2), 173–201. https://doi.org/10.1007/s41979-018-0008-0
Tenenbaum, L. S., Anderson, M. K., Jett, M., & Yourick, D. L. (2014). An innovative near-peer mentoring model for undergraduate and secondary students: STEM focus. *Innovative Higher Education, 39*(5), 375–385. https://doi.org/10.1007/s10755-014-9286-3
Thomas, T. A. (2014). *Elementary teachers' receptivity to integrated science, technology, engineering, ve mathematics (STEM) education in the elementary grades (Unpublished Doctoral Thesis).* University of Nevada, Reno. Erişim adresi: goo.gl/HwQFBf.
Wang, H. (2012). *A New era of science education: science teachers' perceptions and classroom practices of science, technology, engineering, and mathematics (STEM) integration.* (Doctoral dissertation). Retrieved from Proquest. (3494678).
Yaman, c., Özdemir, a., & vural, r.A. (2018). Development of STEM practices teacher self-efficacy scale: A validity and reliability study. Adnan Menderes University Journal of Social Sciences Institute, 5(2), 93–104.
YEĞİTEK. (2019). 2023 *Education Vision.* 17. Quality and Success Symposium. (13 April 2019). Bursa.
Yilmaz, M. (2007). Technology education in classroom teacher training. Dergipark.

Publisher's note Springer Nature remains neutral with regard to jurisdictional claims in published maps and institutional affiliations.

Springer Nature or its licensor holds exclusive rights to this article under a publishing agreement with the author(s) or other rightsholder(s); author self-archiving of the accepted manuscript version of this article is solely governed by the terms of such publishing agreement and applicable law.

Authors and Affiliations

Hasan Güleryüz[1] · Refik Dilber[2]

Refik Dilber
rdilber@atauni.edu.tr

[1] Muş, Turkey

[2] Atatürk Üniversity, Erzurum, Turkey